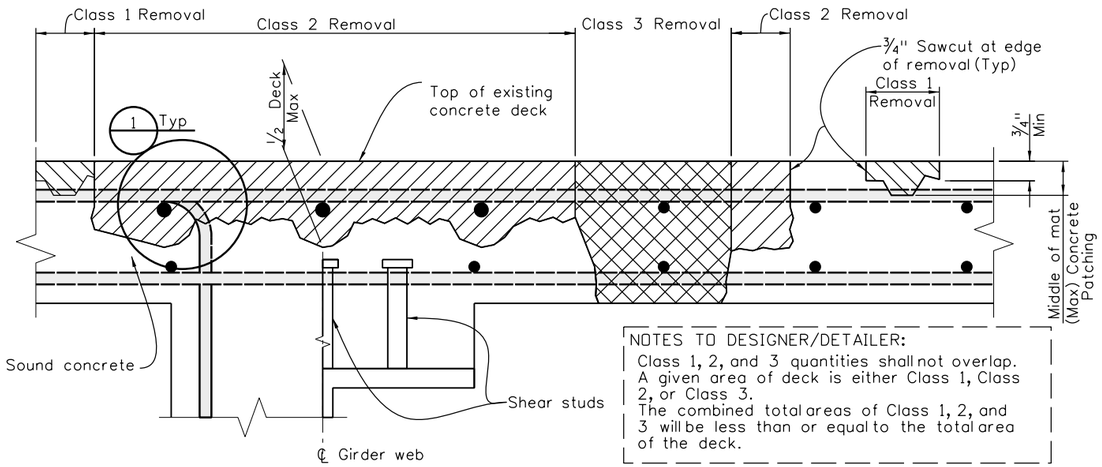

NOTES TO DESIGNER/DETAILER:
Class 1, 2, and 3 quantities shall not overlap. A given area of deck is either Class 1, Class 2, or Class 3.
The combined total areas of Class 1, 2, and 3 will be less than or equal to the total area of the deck.

REMOVAL OF PORTIONS OF PRESENT STRUCTURE (CLASS 1, 2, & 3)

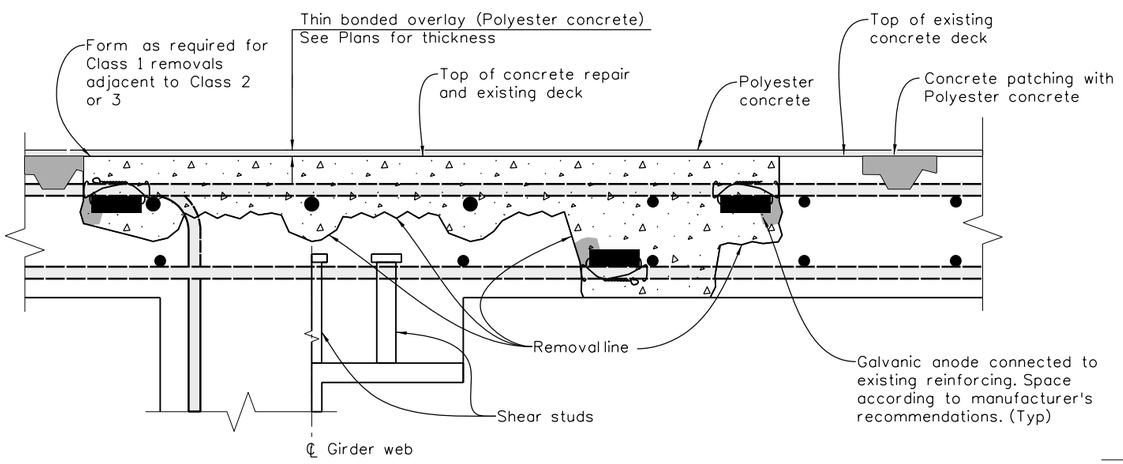

CONCRETE REPLACEMENT

DECK REMOVAL PERCENTAGE ESTIMATION

DECK NBI RATING	CLASS 1	CLASS 2	CLASS 3
7	5%	-	-
6	5%	5%	1%
5	10%	10%	2%

[Designer - Percentages above are just a starting point, adjust per designer judgment up or down based on cores (if taken), actual bridge age, NBI Deck Rating and other visual indicators such as condition of top of bare deck or asphalt overlay and bottom of deck; Modify table as required. E.g. Class 2 could be 10% to 50% at NBI rating of 5; Class 3 is usually 10% of Class 2 estimate.

NOTE TO DESIGNER:

Take out the galvanic anodes and all references to them if it is known that the deck has all coated reinforcing steel.

Add splice lengths on this sheet or refer to General Notes.

LEGEND

Class 1:
From top of deck to sound concrete, but not less than 3/4" and not deeper than the center of the top transverse mat of reinforcing steel. If more than half the diameter of the transverse reinforcing steel is exposed before reaching sound concrete Class 2 removal shall be performed at these locations.

Class 2:
From top of deck to sound concrete, but not less than 1" clear below the top mat of reinforcing steel. If the bottom mat of reinforcing steel is exposed, then Class 3 removal shall be performed at these locations.

Class 3:
From top to bottom of deck, full depth removal.

Concrete Class DR

Patch Material:
Polyester Polymer Concrete - Class 1 repairs shall use same material as Overlay.

Grout Beds:
Required if the clear distance between anodes and existing concrete substrate is less than 1". Grout encapsulation of anodes may be required for certain patching materials. See Revision of Section 602 Galvanic Anodes.

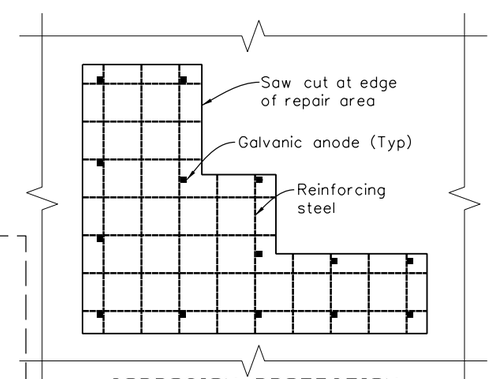

CORROSION PROTECTION

B-202-2
(Use with B-202-3)

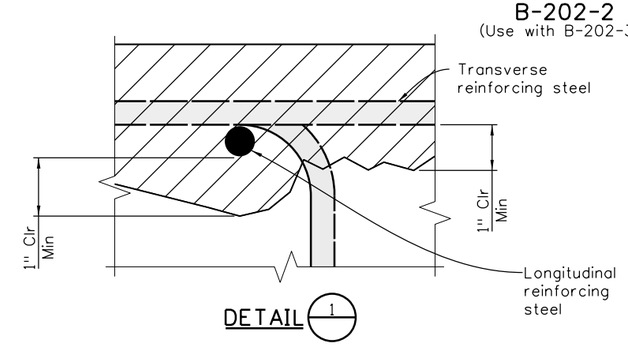

NOTES

1. These details reflect the scope and the nature of the work. They are not intended to represent the actual structure.
2. The applicable classes of removal shall be as designated by the Summary of Quantities in the plans.
3. Plan quantities are estimates. Actual concrete removal and replacement shall be as needed to reach sound concrete or as directed by the Engineer.
4. Removal operations shall be coordinated with the Engineer and performed in a manner as required to ensure the structural integrity of the bridge.
5. If Class 3 removal is performed immediately adjacent to, and on both sides of a Cast-in-Place concrete girder simultaneously within the middle half of a span, that girder shall be supported from the ground at the third points of that span.
6. If Class 2 or 3 removal is performed on both sides of a Cast-in-Place concrete girder simultaneously within the quarter of a span on either side of the pier, that girder shall be supported at the third point each side of that pier. This note is not intended to require falsework for "pothole" type repairs of limited extent where at least one half of the longitudinal deck reinforcing is anchored on both sides of the removal area.
7. If falsework is required, the falsework load capacity required to support the girders shall be determined by the Contractor and reviewed by the Engineer unless specified otherwise on the plans.
8. Care shall be taken in removing concrete from around structural steel elements and reinforcing steel to prevent damage to the steel.

NOTE TO DESIGNER/DETAILER:
[Choose one, depending on whether existing is non-epoxy or epoxy coated:]

9. All damaged or corroded non-epoxy coated reinforcing steel requires new non-epoxy coated reinforcing steel to be added per Revision of Section 202 Removal of Portions of Present Structure. All exposed non-epoxy coated reinforcing steel shall be cleaned with hand tools, straightened and sandblasted prior to placing concrete.

9. All damaged or corroded epoxy coated reinforcing steel requires new epoxy coated reinforcing steel to be added per Revision of Section 202 Removal of Portions of Present Structure. All exposed epoxy coated reinforcing steel shall be cleaned by hand tools of any loose concrete and rust and the cleaned area epoxy coated prior to placing concrete. Sandblasting shall not be performed on any exposed epoxy coated reinforcing steel, unless approved by the Engineer.

10. Galvanic Anode Corrosion protection is required on all areas of exposed non-epoxy or corroded epoxy coated reinforcing prior to placing Concrete. Galvanic Anodes shall be installed per manufacturer's recommendations in accordance with Revision of Section 602 Galvanic Anodes. Anode Quantity Based on 5 Anodes/SY/Class 2 & 3 removal.
11. Patched deck may be opened to traffic as soon as new concrete has attained 2500 psi strength.
12. Polyester concrete overlay shall not be placed until the new concrete meets the moisture criteria of Revision of Section 519 Thin Bonded Overlay (Polyester Concrete}.

Revision Dates					
4/16	3/19	3/23	7/23	9/24	

INITIALS	DESIGN	DATE	DETAIL	DATE	QUANTITY	DATE
By						
Checked By						

All seals for this set of drawings are applied to the cover page(s)

Print Date: $DATE$
File Name: Sheet_B-202-2.dgn
Horiz. Scale: None Vert. Scale: As Noted
Unit Information Unit Leader Initials

Sheet Revisions		
Date:	Comments	Init.

Colorado Department of Transportation
2829 West Howard Place, 3rd Floor
Denver, CO 80204
Phone: 303-512-4079
FAX: 303-757-9197
Staff Bridge Branch Initials

As Constructed
No Revisions:
Revised:
Void:

DECK REPAIR DETAILS
POLYESTER CONCRETE OVERLAY

Designer: XXXXXXXX
Detailer: XXXXXXXX
Structure Numbers X-XX-XX X-XX-XX
Sheet Subset: BRIDGE
Subset Sheets: BXX of XXX

Project No./Code
Project Number
Code
Sheet Number

$PLOT_INFO$